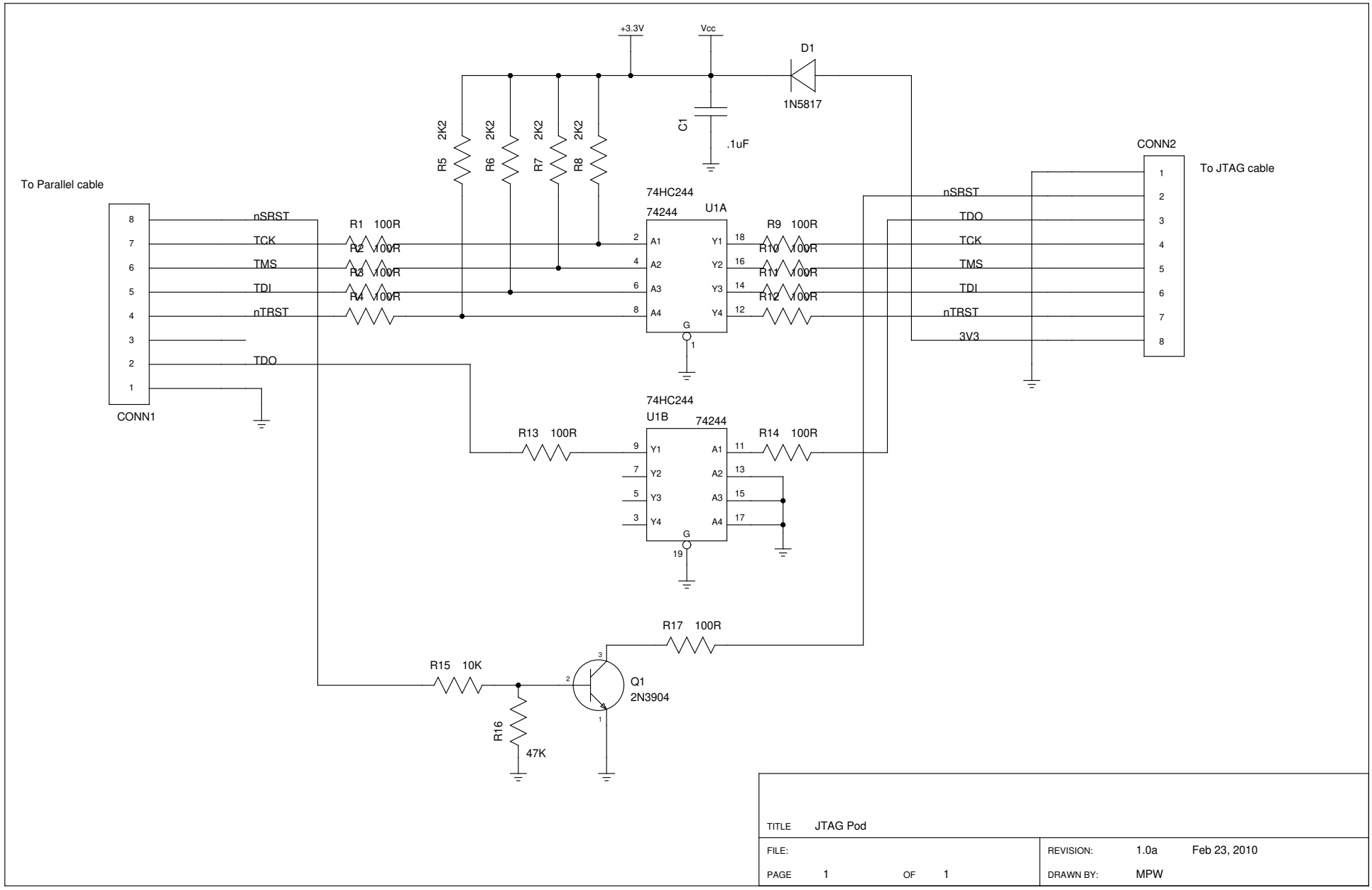


| | | | |
|---|---|---|---|
| TITLE | JTAG Pod | | |
| FILE: | | REVISION: | 1.0a Feb 23, 2010 |
| PAGE 1 OF 1 | | DRAWN BY: | MPW |